FSP-242-277-282-4F01-1/2

CHANGHONG:LT4018\4288

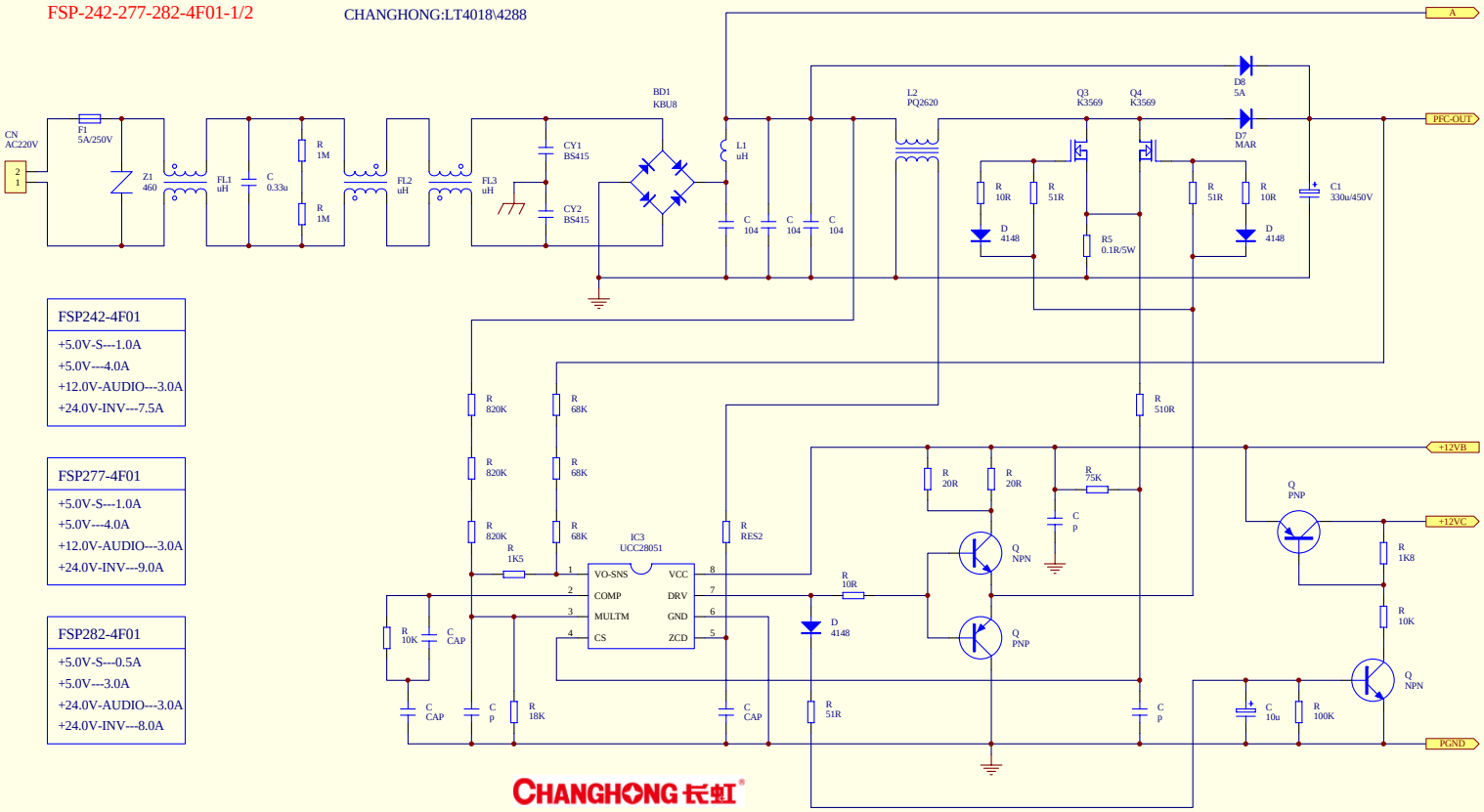

FSP242-4F01
+5.0V-S---1.0A
+5.0V---4.0A
+12.0V-AUDIO---3.0A
+24.0V-INV---7.5A

FSP277-4F01
+5.0V-S---1.0A
+5.0V---4.0A
+12.0V-AUDIO---3.0A
+24.0V-INV---9.0A

FSP282-4F01
+5.0V-S---0.5A
+5.0V---3.0A
+24.0V-AUDIO---3.0A
+24.0V-INV---8.0A

CHANGHONG 长虹®

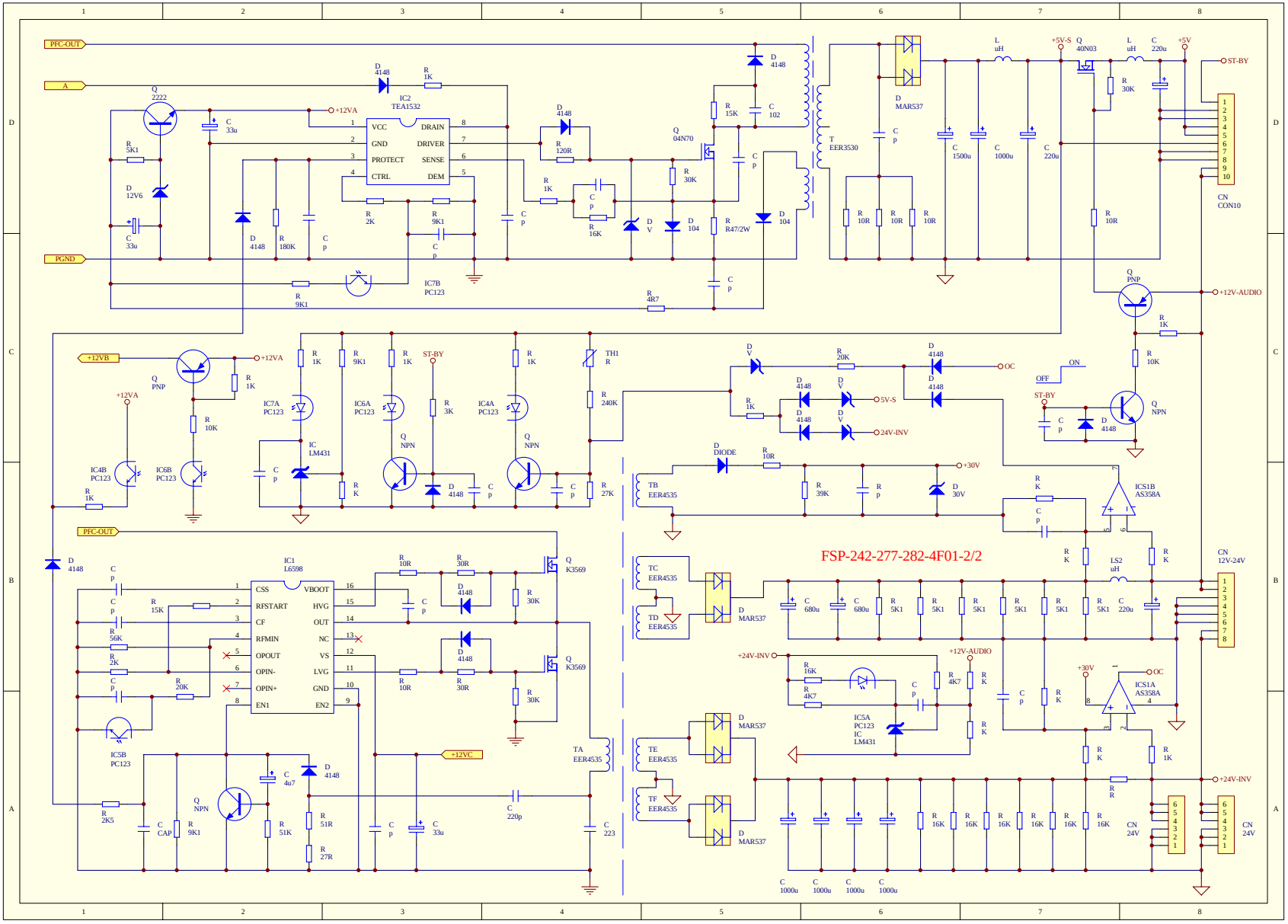
FSP-242-277-282-4F01-2/2
PFC-OUT
A
PGND
+12VA
IC2
TEA1532
VCC
GND
PROTECT
CTRL
DRAIN
DRIVER
SENSE
DEM
Q
2222
D
12V6
Q
04N70
T
EER3530
D
MAR537
+5V-S
Q
40N03
+5V
ST-BY
CN
CON10
+12V-AUDIO
Q
PNP
+12VB
IC7A
PC123
IC6A
PC123
IC4A
PC123
IC4B
PC123
IC6B
PC123
IC
LM431
Q
NPN
TH1
R
OC
ON
OFF
5V-S
24V-INV
+30V
TB
EER4535
TC
EER4535
TD
EER4535
TE
EER4535
TF
EER4535
TA
EER4535
ICS1B
AS358A
ICS1A
AS358A
IC5A
PC123
IC
LM431
IC1
L6598
CSS
RFSTART
CF
RFMIN
OPOUT
OPIN-
OPIN+
EN1
VBOOT
HVG
OUT
NC
VS
LVG
GND
EN2
Q
K3569
+12VC
IC5B
PC123
CN
12V-24V
CN
24V
+24V-INV